POOL
MODELS: 207A THRU 407A LOW NOx

CATALOG NO. 9100.57
Effective: 11-20-13
Replaces: 06-07-12

RAYPAK REPLACEMENT PARTS

MODEL SIZE: 207A, 267A, 337A & 407A
MODEL TYPE:
DATE OF MANUFACTURE: 10-22-04 THRU CURRENT

THE PARTS LISTED ARE FOR STANDARD EQUIPMENT FOR THIS MODEL TYPE. RAYPAK RESERVES THE RIGHT TO SUBSTITUTE, DELETE OR CHANGE ANY PART WITHOUT NOTIFICATION. THE ADDITION OF OPTIONS MAY ALSO CHANGE SOME OF THE PARTS. ORDER REPLACEMENT PARTS FROM ACTUAL HEATER COMPONENTS.

FOR DETAILED INSTRUCTIONS, SEE "HOW TO USE YOUR RAYPAK ILLUSTRATED PARTS LIST", CATALOG NO. 9001.10

Raypak, Inc., 2151 Eastman Avenue, Oxnard, CA 93030
(805) 278-5300 Fax (800) 872-9725
Litho In U.S.A.

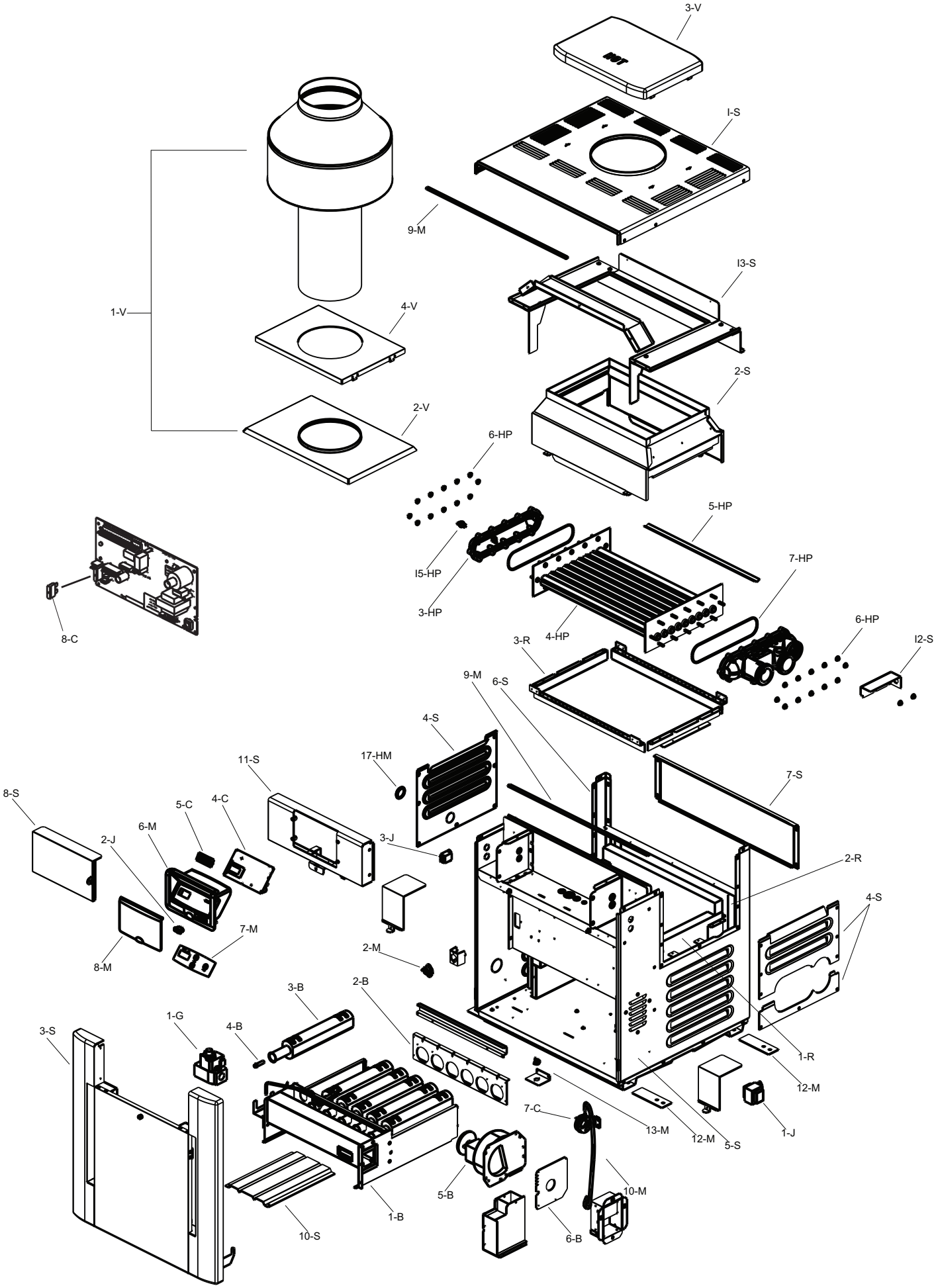
3-V
I-S
9-M
I3-S
1-V
4-V
2-S
2-V
6-HP
5-HP
I5-HP
7-HP
3-HP
4-HP
6-HP
I2-S
8-C
3-R
9-M
6-S
4-S
17-HM
11-S
7-S
8-S
5-C
4-C
6-M
2-J
3-J
2-R
4-S
7-M
8-M
2-M
3-B
2-B
1-G
4-B
3-S
1-R
12-M
7-C
13-M
12-M
5-S
1-J
10-M
5-B
1-B
6-B
10-S

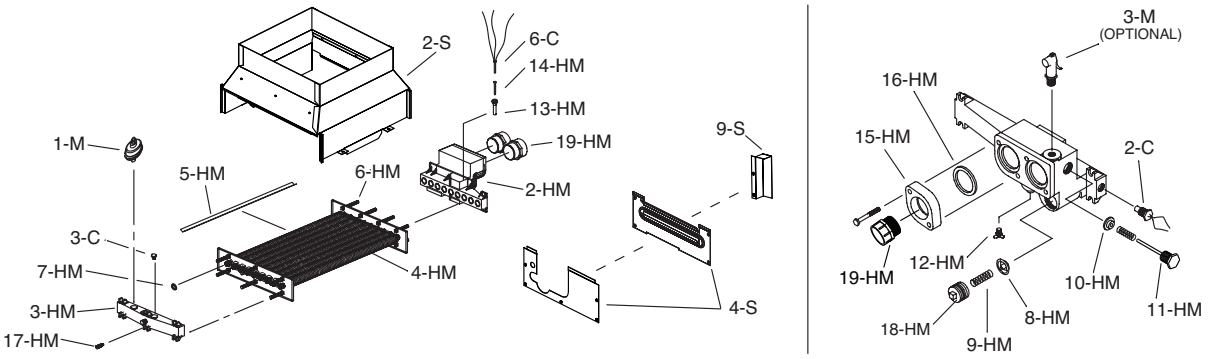

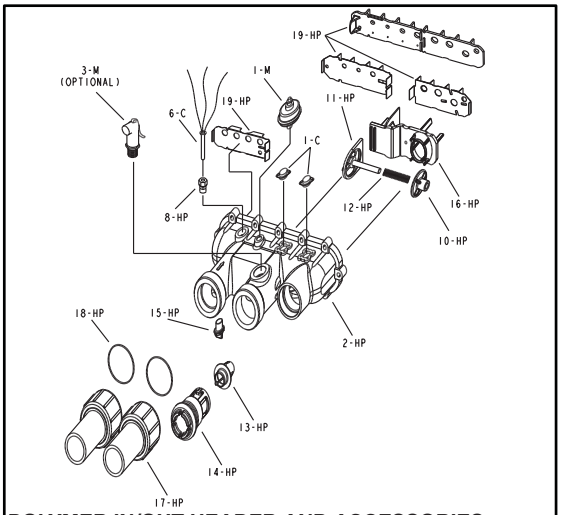

POLYMER IN/OUT HEADER AND ACCESSORIES

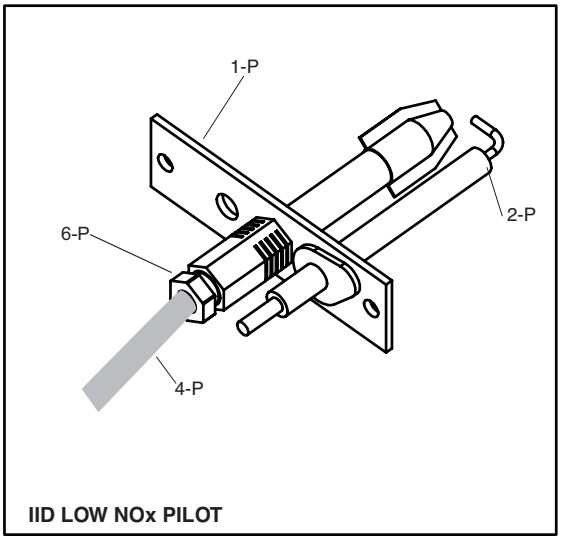

IID LOW NOx PILOT

CALL OUT	DESCRIPTION	207A	267A	337A	407A
BB	**BURNER TRAY*** **				
1-B	Burner Tray w/Burners (0-5000)	010343F	010344F	010345F	010346F
	Burner Tray w/o Burner (0-5000)	010084F	010085F	010086F	010087F
2-B	Burner Hold Down Kit	010254F	010255F	010256F	010257F
3-B	Burner	310732/3	310732/4	310732/5	310732/6
4-B	Burner Orifice Nat. #26 (0-5000)*	351632/3	351632/4	351632/5	351632/6
	Burner Orifice Nat. #31 (above 5000 ft.)*	351523/3	351523/4	351523/5	351523/6
5-B	Blower	010042F	010042F	010042F	010042F
7-B	Cooling Fan	010871F	010871F	010871F	010871F
6-B	Combustion Air Orifice Plate	010338F	010339F	010340F	010341F
C	**CONTROLS**				
1-C	Thermostat Auto Reset 135 Deg Surface Mount	006725F	006725F	006725F	006725F
2-C	AGS 135° (Auto Gas Shut-Off) - Red Epoxy	600892B	600892B	600892B	600892B
3-C	High Limit 140° - Black Epoxy	600893B	600893B	600893B	600893B
4-C	P. C. Board/Control	013464F	013464F	013464F	013464F
5-C	LCD Display				
	Units manufactured prior to 1/2011	N/A	N/A	N/A	N/A
	Units manufactured From 1/2011	013640F	013640F	013640F	013640F
8-C	Fuse 5 AMP	013733F	013733F	013733F	013733F
6-C	Temperature Sensor	009577F	009577F	009577F	009577F
7-C	Blower Pressure Switch	008062F	008135F	010354F	010355F
G	**GAS VALVE**				
1-G	Combination Valve - Gas On/Off -Nat	010329F	010329F	010329F	010329F
HP	**HEAT EXCHANGER - POLYMER**				
1-HP	Heat Exchange Assy Copper	010043F	010044F	010045F	010046F
	Heat Exchange Assy Cupro Nickel	010356F	010357F	010358F	010359F
2-HP	Inlet/Outlet Header Complete	006827F	006827F	006827F	006827F
	Inlet/Outlet Header (Includes 6-HP)	006706F	006706F	006706F	006706F
3-HP	Return Header (Includes 6-HP)	006707F	006707F	006707F	006707F
4-HP	Tube Bundle Copper **	010059F	010060F	010061F	010062F
	Tube Bundle Cupro Nickel **	010364F	010365F	010366F	010367F
5-HP	Baffle	010038F	005261F	010040F	010041F
6-HP	Flange Nut Kit	008259F	008259F	008259F	008259F
7-HP	O Ring Gasket (2)	006713F	006713F	006713F	006713F
8-HP	Sensor Adapter Digital Electronic	006714F	006714F	006714F	006714F
	Sensor Well Millivolt	006805F	006805F	006805F	006805F
9-HP	Bypass Kit	006715F	006715F	006715F	006715F
10-HP	Bypass Valve	006716F	006716F	006716F	006716F
11-HP	Bypass Dam / Shaft	006717F	006717F	006717F	006717F
12-HP	Bypass Spring (All Sizes Included)	006718F	006718F	006718F	006718F
13-HP	Unitherm Governor	006719F	006719F	006719F	006719F
14-HP	Unitherm Governor Plug	006720F	006720F	006720F	006720F
15-HP	Drain Plug	006721F	006721F	006721F	006721F
16-HP	Inlet/Outlet Header Dam	N/A Use 19-HP	N/A Use 19-HP	N/A Use 19-HP	N/A Use 19-HP
17-HP	2" CPVC Connector & Nut (2)	006723F	006723F	006723F	006723F
18-HP	O Ring (2)	006724F	006724F	006724F	006724F
19-HP	Inlet/Outlet Header Baffle w/Header Dam	006826F	006826F	006826F	006826F
HM	**HEAT EXCHANGER - METAL**				
1-HM	Heat Exchange Assy.Copper ASME CI	010051F	006727F	010053F	010054F
	Heat Exchange Assy.Cupro Nickel ASME CI	010360F	010361F	010362F	010363F
2-HM	Inlet/Outlet Header ASME CI (Complete)	006730F	006730F	006730F	006730F
	Inlet/Outlet Header ASME CI	012319F	012319F	012319F	012319F
15-HM	Inlet & Outlet Flange	003766F	003766F	003766F	003766F
16-HM	Flange Gasket 1 1/2" Connections	062236B	062236B	062236B	062236B
	Flange Gasket 2" Connections	800080B	800080B	800080B	800080B
3-HM	Return Header ASME CI	006731F	006731F	006731F	006731F
4-HM	Tube Bundle Copper ASME **	010055F	006733F	010057F	010058F
	Tube Bundle Cupro Nickel ASME **	010368F	010369F	010370F	010371F
5-HM	Baffle	010038F	005261F	010040F	010041F
6-HM	Stud Bolt Kit	007870F	007870F	007870F	007870F
7-HM	Header Gasket (9)	800014B	800014B	800014B	800014B
8-HM	Unitherm Governor	062234B	062234B	062234B	062234B
9-HM	U.G. Retainer Spring	013792F	013792F	013792F	013792F
18-HM	U.G. Plug	013738F	013738F	013738F	013738F
10-HM	Bypass Valve	062235B	062235B	062235B	062235B
11-HM	Bypass Spring	850252	013794F	013794F	013794F
12-HM	Drain Valve	013793F	013793F	013793F	013793F
13-HM	Sensor Well	003765F	003765F	003765F	003765F
14-HM	Well Retaining Clip	300203	300203	300203	300203
17-HM	Rear Drain Plug & Cover	005264F	005264F	005264F	005264F
19-HM	Adapter CPVC 2"	005393F	005393F	005393F	005393F

*FOR INSTALLATIONS AT OVER 5,000 FEET ABOVE SEA LEVEL, CONSULT THE FACTORY

**WARNING: The Hydraulic conditions or water chemistry that caused the tube bundle to fail have very likely also damaged the bypass valve and Unitherm Governor. We recommend you replace the Unitherm Governor and inspect the bypass assembly. Failure to do so could cause premature failure of this replacement part.

***Replacement burner trays are built for sea level, natural gas applications unless otherwise specified at the time the order is placed.

CALL OUT	DESCRIPTION	207A	267A	337A	407A
J	**CONTROL BOX**				
1-J	Transformer 120/240/24V	006736F	006736F	006736F	006736F
2-J	Rocker Switch	009493F	009493F	009493F	009493F
3-J	Relay Low Nox	008784F	008784F	008784F	008784F
M	**MISCELLANEOUS COMPONENTS**				
1-M	Pressure Switch 1.75 PSI	006737F	006737F	006737F	006737F
	Pressure Switch 11 PSI Special-See Water Pressure Switch Adj.	009133F	009133F	009133F	009133F
2-M	Roll-Out Switch 300ºF	006035F	006035F	006035F	006035F
3-M	PRV 125 PSI (Optional)	008091F	007224F	007224F	007224F
4-M	Deliming Kit	052871F	052871F	052871F	052871F
5-M	Wire/Harness	010347F	010347F	010347F	010347F
6-M	Control Bezel (Includes Switch Decal)				
	Units manufactured prior to 1/2011	009491F	009491F	009491F	009491F
	Units manufactured From 1/2011	013491F	013491F	013491F	013491F
7-M	Switch/Decal-Membrane				
	Units manufactured prior to 1/2011	009492F	009492F	009492F	009492F
	Units manufactured From 1/2011	013492F	013492F	013492F	013492F
8-M	Control Bezel Cover	009487F	009487F	009487F	009487F
9-M	Gasket Insulation (Swaybrace & Jacket Top)	010350F	010350F	010350F	010350F
10-M	Blower / Air Pressure Switch Sample Tube	010348F	010348F	010348F	010348F
11-M	Touch-up Paint				
	Green	750125	750125	750125	750125
	Dark Gray	750126	750126	750126	750126
	Cool Dark Gray	750256	750256	750256	750256
	Warm Dark Gray	750258	750258	750258	750258
12-M	Tie Down Bracket (Optional)	011636	011636	011636	011636
13-M	Roll-Out Switch 250ºF (Optional)	011745F	011745F	011745F	011745F
	Roll-Out Switch 250ºF (Upgrade)	011733F	011733F	011733F	011733F
14-M	Texas Code Add/On (ASME Only)	012011	012011	012011	012011
P	**PILOT**				
1-P	Pilot Nat. IID Low Nox	010232F	010232F	010232F	010232F
2-P	Pilot Electrode	N/A	N/A	N/A	N/A
3-P	Pilot Mounting Bracket	010233F	010234F	010235F	010236F
4-P	Pilot Tube	011926F	011926F	011926F	011926F
5-P	Hi Tension Wire IID	010349F	010349F	010349F	010349F
6-P	Adapter Nut (Metric)	011927F	011927F	011927F	011927F
R	**REFRACTORY**				
1-R	Refractory Common (Left & Right)	010079F	010079F	010079F	010079F
2-R	Refractory Uncommon (Front and Rear)	010080F	010081F	010082F	010083F
3-R	Refractory Retainer Kit	010262F	010263F	010264F	010265F
S	**SHEETMETAL**				
1-S	Jacket Top (Louvered)	010047F	010048F	010049F	010050F
2-S	Flue Collector (Units with Polymer Header)	010063F	010064F	010065F	010066F
	Flue Collector (Units with Metal Header)	010067F	010068F	010069F	010070F
3-S	Door Assy.				
	Raypak				
	Green	010267F	010268F	010269F	010270F
	Cool Dark & Warm Dark Gray	013871F	013872F	013873F	013874F
	Rheem				
	Green	010271F	010272F	010273F	010274F
	Cool Dark & Warm Dark Gray	013875F	013876F	013877F	013878F
	Ruud				
	Green	010271F	010272F	010273F	010274F
	Warm Dark Gray (Units manufactured prior to 9/2012)	013879F	013880F	013881F	013882F
	Cool Dark & Warm Dark Gray (Units mfd after to 9/2012)	013871F	013872F	013873F	013874F
4-S	Access Panel Set (3 Pcs. Units with Polymer Header)	010311F	010311F	010311F	010311F
	Access Panel Set (3 Pcs. Units with Metal Header)	010312F	010312F	010312F	010312F
5-S	Jacket Side Panel Right	010313F	010313F	010313F	010313F
6-S	Jacket Side Panel Left	010314F	010314F	010314F	010314F
7-S	Jacket Rear Panel (2 Pcs.)	010315F	010316F	010317F	010318F
8-S	Poolstat Cover/Lock	009505	009505	009505	009505
9-S	High Limit Cover	010319F	010319F	010319F	010319F
10-S	Base Heat Shield	010320F	010320F	010320F	010320F
11-S	Up Front Control Panel				
	Green	010321F	010322F	010323F	010324F
	Cool Dark Gray	013887F	013888F	013889F	013890F
	Warm Dark Gray	013891F	013892F	013893F	013894F
12-S	High Limit Shield	010342F	010342F	010342F	010342F
13-S	Weather Shield	010325F	010326F	010327F	010328F
V	**VENTING**				
1-V	Indoor Stack Kit (Includes inner adapter panel)	009838	009839	009840	009841
	Outdoor Stack Kit (Includes inner adapter panel)	009834	009835	009836	009837
2-V	Stack Adapter	010330F	010331F	010332F	010333F
4-V	Outer Stack Adapter	011461F	011462F	011463F	011464F
3-V	"Pagoda" Top				
	Green	010334	010335	010336	010337
	Cool Dark Gray	013883F	013884F	013885F	013886F

Raypak®
A Rheem® Company

ISO 9001

Registered Quality Management System

www.raypak.com